FAT CNC LATHE
TUR MN 630/710 P

NEW !

DESIGNED FOR PRECISE MACHINING - DEDICATED FOR PIPES
SPINDLE BORE: 165MM OR 190MM

The TUR MN P is based on the already well-established range of FAT Haco TUR MN turning centres, renowned for their durability, reliability and high precision.

The P derivative of the TUR is designed to meet the constantly growing market demand for machines needed for highly efficient turning of pipes, from the smallest diameters up to Ø190mm. Machining of other features is also possible due to the versatility of the Siemens 840 D SL control, a powerful main drive and the various options available on the machine.

This new lathe has a direct spindle drive which provides a smooth, constantly variable spindle speed, thereby assuring a stable and controlled machining process. The high torque available at the spindle nose is achieved by the use of a planetary gear box driven by a powerful 18.5kW motor. The combination of a dual spindle arrangement on the headstock and a large bore guarantees optimal mounting and support for long parts.

A number of options can, as well as giving us the capability of supplying a machine configured to an individual client's needs, be selected to increase the machines' efficiency, specific to any application or requirement.

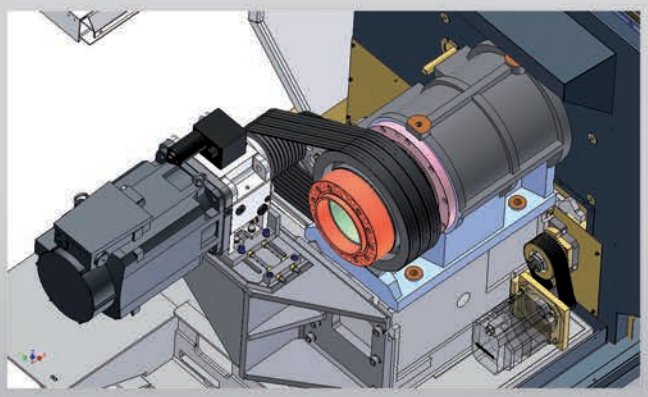

		TUR MN P 630		TUR MN P 710	
CAPACITY					
Distance between centres	mm	1000 - 2000 – 3000 – 4000			
Swing over bed	mm	630		710	
Swing over saddle	mm	370		450	
Max weight between centres (without steadies)	kg	600		600	
SPINDLE					
Number of spindle ranges		2		2	
Spindle speed ranges	rpm	I: 2-430, II: 200-1800		I: 2-430, II: 200-1800	
Spindle nose (DIN 55029)		2 x A2-11	2 x A2-15	2 x A2-11	2 x A2-15
Spindle bore	mm	165	190	165	190
Max. main drive motor power	kW	18,5		18,5	
Max. turning torque	Nm	1625		1625	

OPEN HOUSE

INVITATION

OPEN HOUSE at FAT HACO in Wrocław Poland 6th & 7th of September 2013

Looking for new solutions to give you the edge over your rivals ?

Come and see what we can offer to your work shop - the most cost effective lathes with exceptional stability, high precision and unrivalled quality.

Our programme:
- Presentation of new products:

- **TUR 4 MN: heavy duty** 4-guideway lathe designed for highly efficient machining of long and heavy workpieces
- **TUR PMN** a new model, based on the well-established and popular TUR MN series, adapted for pipe turning

- Factory tour to view our manufacturing processes and see other machines and models in various stages of production

You are then welcome to join us for a barbeque with many prizes!

NEW HEAVY DUTY LATHE - FAT TUR 4 MN SERIES with 4 independent guide ways

NEW !

DESIGNED FOR HIGHLY EFFICIENT MACHINING OF LARGE AND HEAVY WORKPIECES

- Turning diameter: up to 3 000 mm
- Distance between centres: up to 22 m
- 4 independent guide ways
- Component weight: up to 100 T
- Turning torque: up to 300 000 Nm

FAT HACO has increased its range of CNC turning centres with the addition of the TUR 4 MN series of heavy duty lathes, developed for rough and finish turning of heavy steel and cast iron workpieces.

The whole machine concept and design is based around an extremely rigid cast iron step-bed, with 4 hardened guide ways to assure maximum stability.

The integration of innovative mechanical features, advanced programming techniques and a powerful control system results in a quality CNC lathe capable of high precision rough and finish machining, contouring, precise taper turning, threading and facing, with the constant cutting speed feature ensuring total consistency.

Different options, both standard and bespoke if required, enlarge the machines' capabilities on turning, milling, drilling or grinding. TUR 4 MN machines can be configured and, if necessary, developed in close co-operation with the client in order to meet the individual users' needs and dependent on the application.

We are proud to announce that we have already been successful in securing several TUR 4 MN projects and orders from Thyssen Krupp in Germany and Ellwood City Forge in the USA.

		TUR 4 MN
CAPACITY		
Distance between centres	mm	2 000 – 22 000
Swing over bed	mm	700 – 3 000
Swing over saddle	mm	500- 3 000
Max. weight between centres (without steadies)	kg	10 000 – 100 000
Max. turning torque	Nm	300 000

Sign up before 1st of September!

Fill in the coupon and send it back to us by Fax: 48 71 36 09 121

or e-mail: marketing@fathaco.com

Company: .....

Full name: .....

Position: .....

Address: .....

Phone: .....

E-mail: .....

We will attend: ☐ 6th of September ☐ 7th of September

OPEN HOUSE at FAT HACO in Wrocław Poland 6th & 7th of September 2013

FABRYKA AUTOMATÓW TOKARSKICH WE WROCŁAWIU S.A.
GRUPA HACO

ul. Grabiszyńska 281
53-234 Wrocław

www.fathaco.com
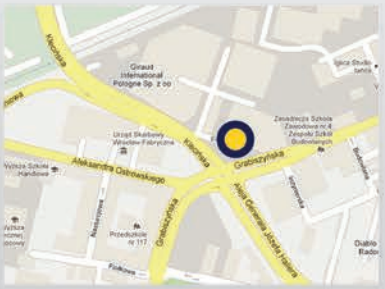
Tel.: 48 71 36 09 100
Fax: 48 71 36 09 121