Elektrim® Premium All-Purpose Motors (31N Series)

					CONT.	TEFC	182TC

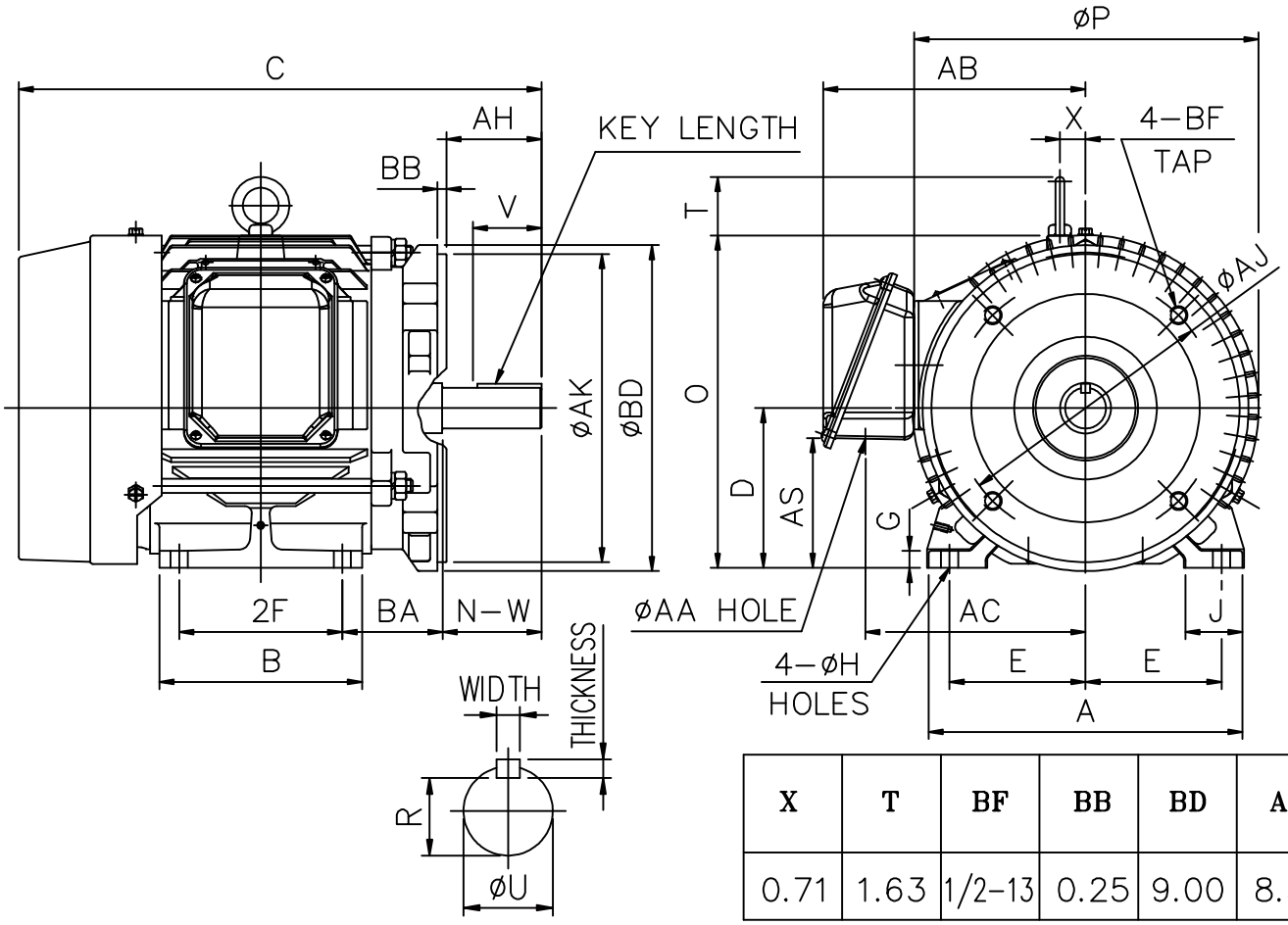

X	T	BF	BB	BD	AK
0.71	1.63	1/2–13	0.25	9.00	8.50

MOUNTING				A	B	C	D	G	J	O	AH	P	AJ
E	2F	H	BA										
3.75	4.50	0.41	2.75	8.66	5.59	14.43	4.50	0.56	1.57	9.27	2.62	9.55	7.250

AC	KEY			KEYSEAT	CONDUIT BOX			SHAFT EXTENSION			BEARING NO.		APR. WT.
	WIDTH	THICK-NESS	LENGTH	R	AS	AA	AB	N–W	U	V	D.E	O.D.E	
5.91	0.250	0.250	1.750	0.986	3.63	1.10	7.09	2.75	1.125	2.70	6207ZZ	6206ZZ	106 lb

NOTE:1. TOLERANCE OF SHAFT END DIAMETER U: +0.000,–0.0005
2. TOLERANCE OF SHAFT CENTER HEIGHT D: +0.000,–0.03
3. DIMENSION R TOLERANCE: +0.000,–0.015
4. DIMENSION AK TOLERANCE: +0.000,–0.003
5. DIMENSION V IS LENGTH OF STRAIGHT PART OF SHAFT.

C-FACE