# Elektrim® Premium All-Purpose Motors

## 32N Series

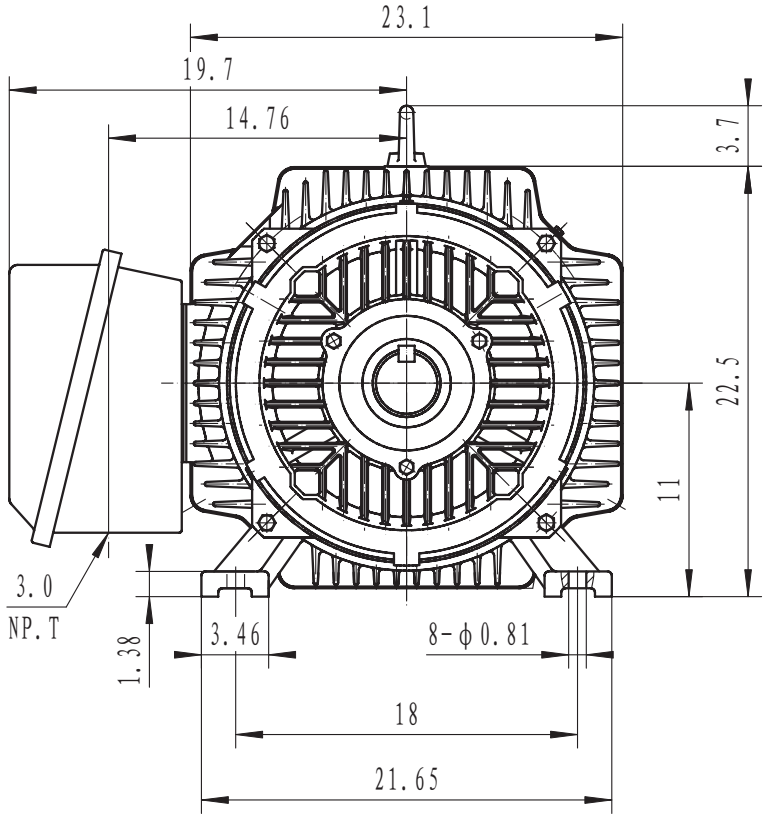


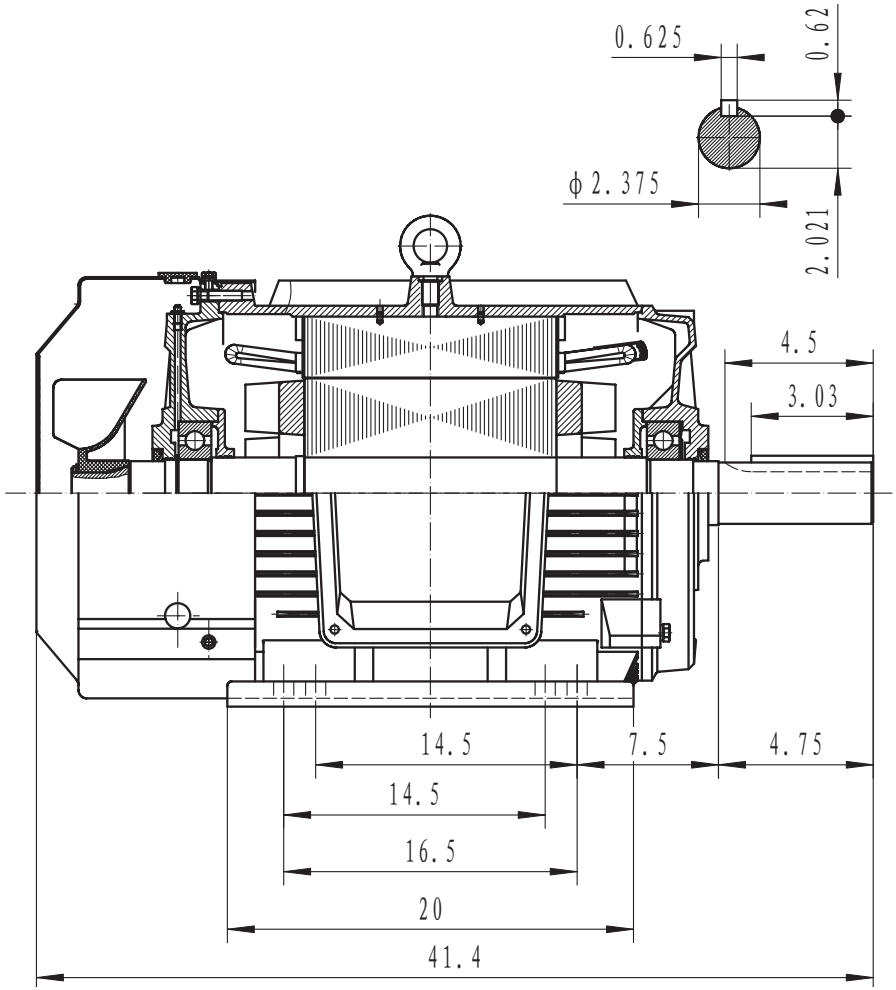


# FRAME 444TS - 445TS