Manual Collet Lathe Chucks

Manual

Type 5C and 16C

READ INSTRUCTIONS

Do not use any extension on the chuck wrench.

1. SCOPE OF THIS MANUAL

- Mounting on the machine tool spindle
- Set-up and operation
- Maintenance

2. APPLICATION

Collet Lathe Chucks are to be used on horizontal lathe machines for the purpose of holding round, hexagonal or square workpieces.

Manual Collet Lathe Chucks are designed to work with 5C and 16C collets (NOT INCLUDED).

3. 5C AND 16C COLLETS

1. Taper
2. Threaded end
3. Locking slot
4. Serrations

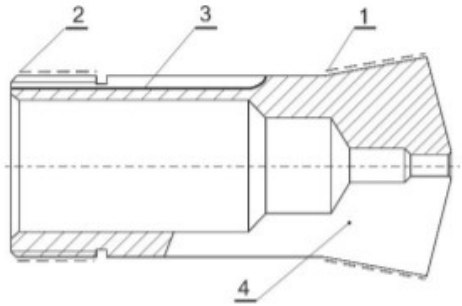

4. 5C AND 16C COLLET CHUCKS

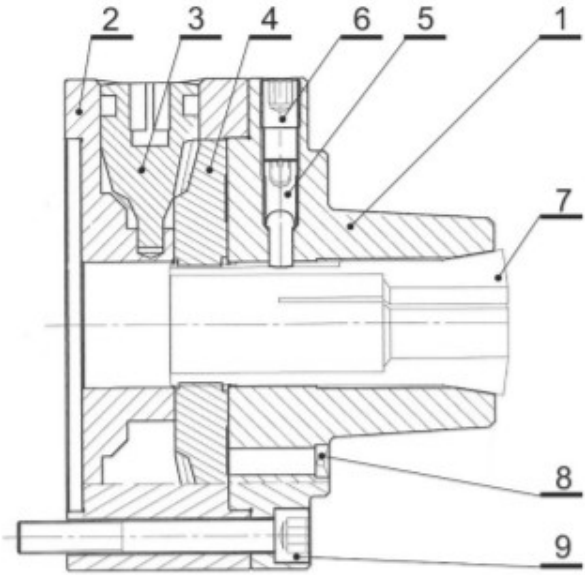

1. Front of the chuck body
2. Back of the chuck body
3. Pinion
4. Scroll plate
5. Collet locking wedge
6. Collet locking screw
7. Collet in collet seat
8. Grease port
9. Mounting bolt

5. 5C AND 16C COLLET CHUCKS WITH SET-TRU™ FEATURE

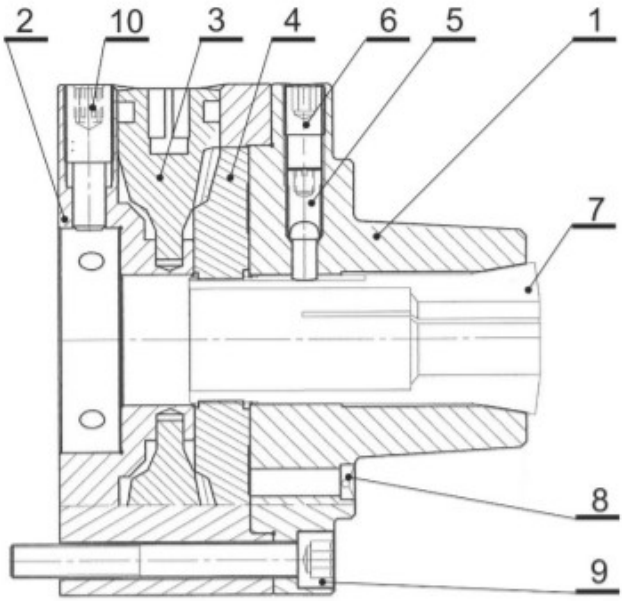

1. Front of the chuck body
2. Back of the chuck body
3. Pinion
4. Scroll plate
5. Collet locking wedge
6. Collet locking screw
7. Collet in collet seat
8. Grease port
9. Mounting bolt
10. Fine adjustment screw

6. 5C AND 16C COLLET CHUCKS WITH TRU-Length FEATURE

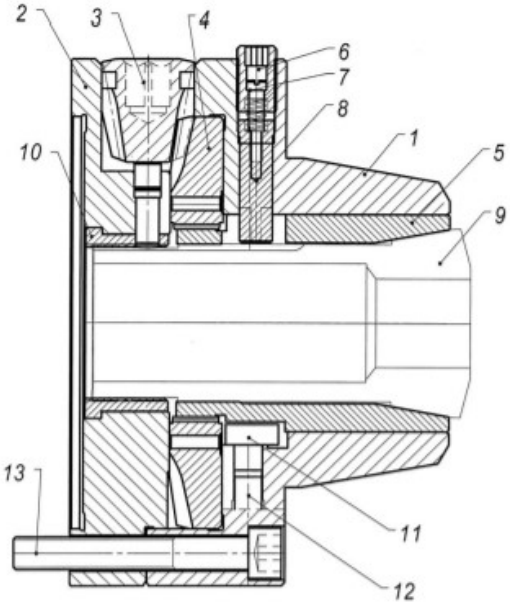

1. Front of the chuck body
2. Back of the chuck body
3. Pinion
4. Scroll plate
5. Collet sleeve
6. Collet locking screw
7. Collet locking wedge
8. Collet locking wedge
9. Collet in collet sleeve
10. Threaded end
11. Sleeve locking pin
12. Sleeve locking screw
13. Mounting bolt

7. 5C AND 16C COLLET CHUCKS WITH SET-TRU™ AND TRU-Length FEATURE

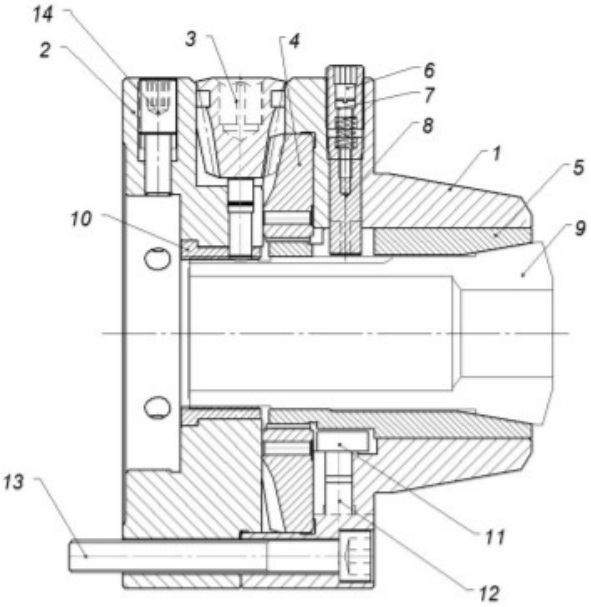

1. Front of the chuck body
2. Back of the chuck body
3. Pinion
4. Scroll plate
5. Collet sleeve
6. Collet locking screw
7. Collet locking wedge
8. Collet locking wedge
9. Collet in collet sleeve
10. Threaded end
11. Sleeve locking pin
12. Sleeve locking screw
13. Mounting bolt
14. Fine adjustment screw

8. PREPARING AND MOUNTING

Carefully remove the chuck from the box and clean it removing any oils or packaging debris (chuck will be slippery). Pay special attention to the inner nose of the chuck (where the collet will be inserted).

Chuck is mounted on the machine tool spindle using supplied bolts and from the front of the chuck and through the appropriate spindle adaptor adaptor (NOT INCLUDED)

Adaptor is to be pushed into the recess on the back of the chuck and attached to the back of the chuck with the bolts supplied with the adaptor.

Chucks with SET-TRU™ include fine adjustment screws which in most situation and when used correctly will eliminate any potential runout caused by the machine tool spindle chuck or the collet.
For specific procedure of how to correctly mount a chuck with SET-TRU™ feature please refer to: https://youtu.be/PicgDJia-h8

9. INSTALLING THE COLLET

Insert the collet into the collet seat and thread it in by turning the pinion with the supplied wrench. Align the collet locking wedge with the groove on the side of the collet. Tightening the collet locking screw will prevent the collet from turning but it will allow it to move in and out of the seat.

1. Collet
2. Collet locking groove

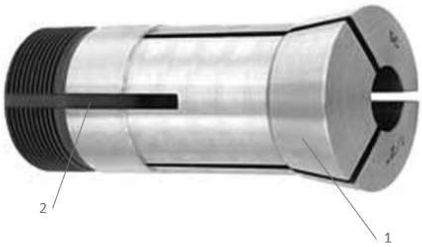

10. OPERATION

Use the supplied wrench to turn the pinion (clockwise) on the side of the chuck to draw the collet into the chuck. Drawing the collet all the way in will make the collet collapse (grip), release it out will make the collet open (release). In case of chucks with TRU-Length feature, turning the pinion will slide the collet sleeve around the collet making it close (grip) or open (release) while the collet will remain fixed.

Attention should be given to the correct selection of collets to the diameter of worked bar. The real workpiece diameter must not be lower by more then 0.5 mm from the nominal size of the collet.

11. MAINTENANCE

After 8 hours of work, lubricate the chuck with machine oil via grease port. After 2000 hours of work, remove chuck from the machine tool spindle, dismantle the chuck, clean and grease all individual inner components.

Each person servicing the chuck should become familiar with this manual before conducting any maintenance work.

If damage of the chuck is observed, all work should immediately be stopped, and the chuck should be evaluated by the supervising staff. At that point, the replacement of parts or the entire chuck may be necessary.

Repair and overhaul of this chuck should only be carried out by qualified personnel.

No modification should be done to the chuck body or inner components.

This chuck is covered by 2-year defect and performance warranty. Failure to follow instructions in this manual will void the warranty.

TMX

34 Talbot Road
Northborough, MA 01532

844-TMX-TOOL (844-869-8665)
+1-508-653-8897

support@toolmex.com